Self-Priming Centrifugal Pump

Patented in Japan, U.S.A., other

Bore	40-250mm
Total head	10-90m
Capacity	0.1-8m^3/min

Self-Priming Centrifugal Pump
UHN series (PAT.)

Outstanding self-priming performance even under extreme conditions

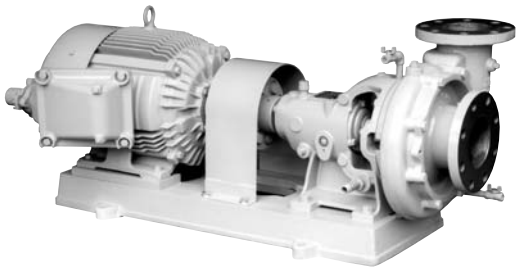

Standard centrifugal pumps have no self-priming capability and are incapable of pumping when water flow is discontinued in the suction pipe. The oval shaped self-priming pump has weak self-priming force at locations where back pressure is present, and the higher the pump head, the harder to self-prime the water.
The YOKOTA Self-Priming Centrifugal Pump has the same pumping capability for high head pumping as other centrifugal pumps, however its self-priming force is extremely strong at 500-700mmHg, which enables the pump to be used even under extreme conditions.

For suction pumping with outstanding self-priming power:	**UHN type**
For intake piping across embankments or long intake pipes:	**Priming strengthened UHNS/UHNK types**
For high density slurry:	**UHT type**
For installation in places subject to submersion:	**UHPR type with submersible motor**

Features of the YOKOTA Self-Priming Centrifugal Pump

Outstanding self-priming power
The internationally patented water-air separating mechanism reaches a maximum vacuum of 500-700mmHg (6-9m water column) and displays outstanding self-priming power.

No problem with suction of air during pumping
A large amount of incoming air can be separated and discharged during pumping. Even if pumping becomes subject to suction or mixture of air due to fluctuations of suction conditions, it continues pumping, constantly discharging air, and restores normal pumping operation as soon as suction conditions return to normal. Even continuous suction of air-containing water is possible.

Low NPSH
Even if cavitation develops due to fluctuations of suction conditions such as water level, temperature, or vacuum level on the suction side, this pump can still continue its pumping operation. Therefore, this pump does not require allowance for NPSH, and enables stable pumping operation even under fluctuating suction conditions. It naturally shows outstanding performance for extraction from sealed (vacuum) tanks.

Intake piping across embankments or long intake piping is possible
Because of superior intake power, intake pipes can be installed across embankments.
Intake piping with long piping is also possible.

Outstanding pumping performance
This single-suction, single-stage centrifugal pump displays outstanding pumping performance in a wide range of specifications.

Large selection of models, Large selection of materials
This self-priming pump has an incomparably wide variety of models available for easy selection. Further, a wide variety of materials are available, including FC, CAC, SCS and YOKOTA's corrosion and wear resistant special stainless steel casting (YST), to meet the needs of various kinds of liquid.

Construction that can meet a wide range of specifications
Standard constructions include semi-open impellers for small pumps and closed impellers for medium and larger pumps.
The impeller has been improved to form ideal blades for high efficiency.
An oil bath lubrication system is adopted for bearings.
Maintenance is easy to perform because construction is simple and the number of parts in the water passage section is minimized.

Stable quality
All special material products are manufactured internally in a continuous process to ensure stable quality.

Yokota Manufacturing Co., Ltd. Tel:+81-082-241-8672 Fax:+81-082-504-1115

Principle of self-priming (PAT.)

The pump casing consists of a smaller passage and a larger passage forming a semi-double volute and a cavity holder in the discharge nozzle.

1. Flow of circulation

During self-priming, the water discharged from passage A in the semi-double volute returns to the impeller through passage B-C, and is discharged again into passage A.

2. Removal of bubbles

This recirculation flow mixes the water and the air in the center with intense vortex D within the impeller and discharges it into passage A.

3. Water-air separation and exhaust

The water-air mixture is led from passage A to discharge nozzle B in a cyclonic state and automatically separated by centrifugal force, and then the water is recirculated through passage B-C.
The separated air is then held by cavity holder E, and compressed and discharged.

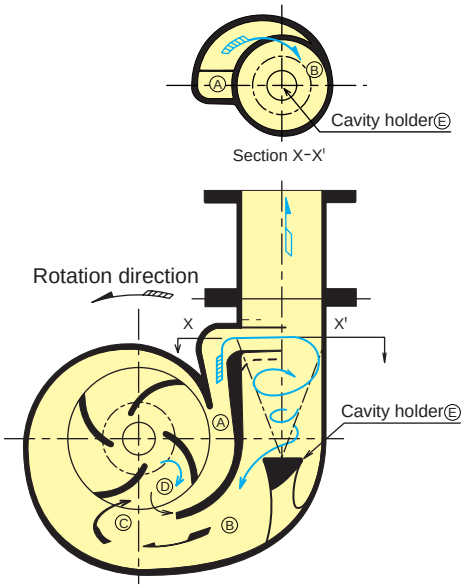

Applications

The YOKOTA Self-Priming Centrifugal Pumps can be used even under extreme conditions. They can be used, for example, as condensate pumps, drain pumps, chemical pumps for liquids containing air, and pumps for extraction from sealed tanks.

Chemical industry:	Acids, Alkaline liquids, Solvents, Slurry liquids, other
Food industry:	Brewery, Sugar refining, other
Mining industry:	Seawater, Slurry liquids, other
Paper industry:	Pulp, Effluent, White water, Black water, other
Electric power:	Exhaust gas desulfurizer (Limestone slurry pumps, other), Seawater, Water treatment, other
Electronic industry:	Ultra-pure water manufacturing devices, Acidic waste water, Polishing waste water treatment, other
Aquarium, Fish farming:	Seawater suction, Circulation pumps, other
Others:	Hot springs, Hot oil, other

This is a self-priming type pump for suction pumping.
For the non-self-priming type (for force pumping) with similar specifications, please refer to Centrifugal Pump UEN series (P.68).

Self-Priming Centrifugal Pump

Patented in Japan, U.S.A., other

Bore	40-250mm
Total head	10-90m
Capacity	0.1-8m^3/min

Structure (UHN type)

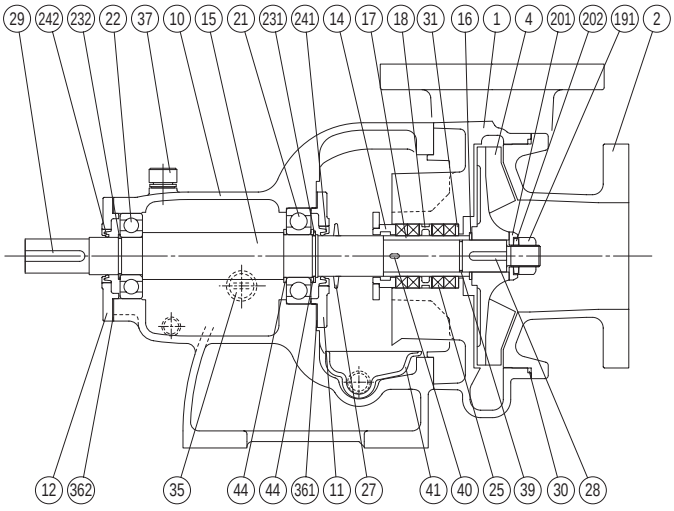

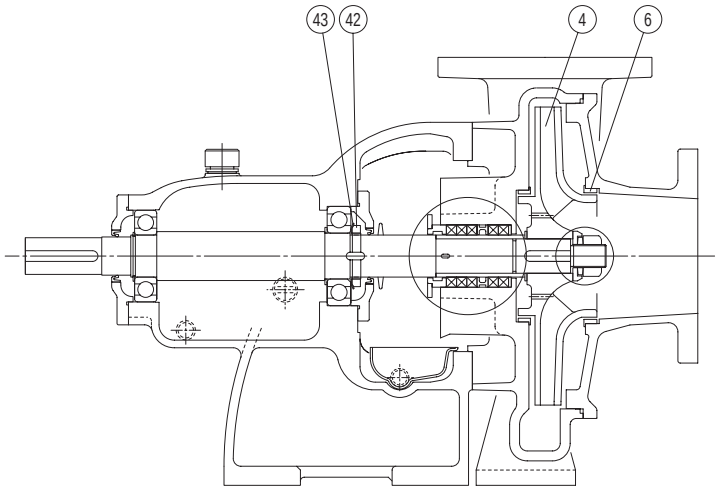

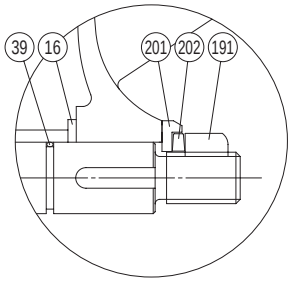

Nut type

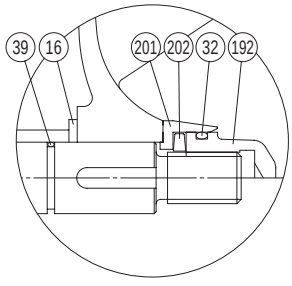

Cap-nut type

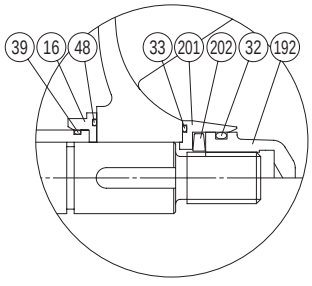

Shaft-seal type

Part name		Part name		Part name		Part name	
1	Casing	191	Impeller nut	28	Impeller key	41	Pan (Option)
2	Suction cover	192	Impeller nut	29	Coupling key	42	Bearing nut
4	Impeller	201	Impeller washer	30	Casing packing	43	Bearing washer
6	Liner ring	202	Spring washer	31	Gland bush	442	Support ring
10	Bearing bracket	21	Ball bearing	32	O-ring	48	O-ring
11	Front bearing cover	22	Ball bearing	33	O-ring		
12	Rear bearing cover	231	Stop ring	35	Oil level gauge		
14	Gland	232	Stop ring	361	Bearing packing		
15	Shaft	241	Oil seal	362	Bearing packing		
16	Impeller spacer	242	Oil seal	37	Oil cap		
17	Sleeve	25	Gland packing	39	Sleeve packing		
18	Seal ring	27	Deflector	40	Sleeve key		

Yokota Manufacturing Co., Ltd. Tel:+81-082-241-8672 Fax:+81-082-504-1115

Shaft seal

Gland packing External flushing type is used for contaminated water pumping or suction pumping.	Non-External-Flushing Mechanical Seal No need of external sealing water and applicable to any kind of liquid.
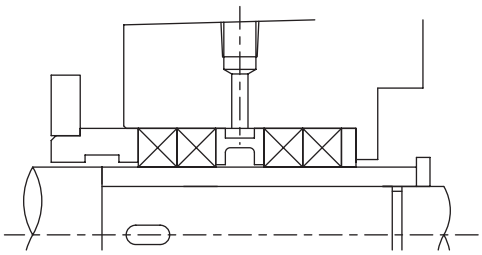	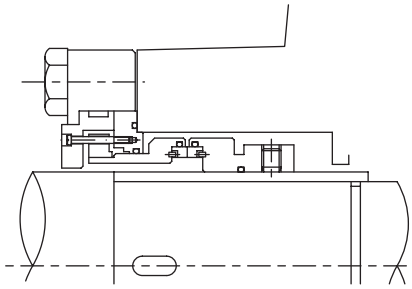
Mechanical seal Various types of mechanical seals can be installed.	Mechanical seal (oil bath) Oil-bath lubrication allows dry operation.
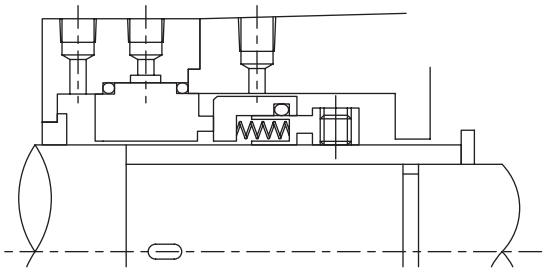	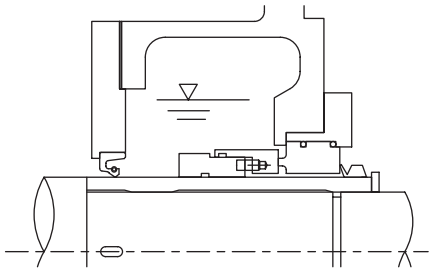

We can also provide double mechanical seals.

Materials

Part name	Material code					
	A	F	X	Y	N	R
Casing	FC200	FC200	SCS13	SCS14	YST130N	CCR10
Impeller	FC200	SCS13	SCS13	SCS14	YST130N	CCR10
Shaft	SUS304	SUS304	SUS304	SUS316	SUS316	SUS304

- Special material products are manufactured internally in a thoroughly continuous process from casting under complete material and heat-treatment control.
- YOKOTA's corrosion and wear resistant special stainless steel casting (YST) has been adopted for anti-pollution devices, seawater pumps, and other pumps, acquiring highly reputable results. For details, please refer to Special Stainless Steel YST series (P.146).

Self-Priming Centrifugal Pump

Patented in Japan, U.S.A., other

Bore	40-250mm
Total head	10-90m
Capacity	0.1-8m^3/min

Structure (UHNS/UHNK types, UHT type, UHPR type)

UHNS/UHNK types: Priming strengthened types for intake piping across embankments or long intake pipes

UHNS type:
Water-air separating impeller is installed in the main pump of UHN type to enhance self-priming with vacuum pump.

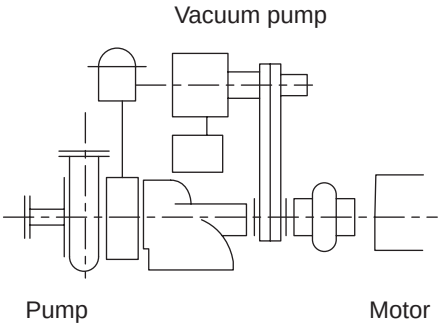

UHNK type:
Main pump is standard UHN type.
Self-priming strengthened by vacuum pump in order to reduce self-priming time in long suction piping.
Automatic operation with No-Feed Detector and priming-water detector.

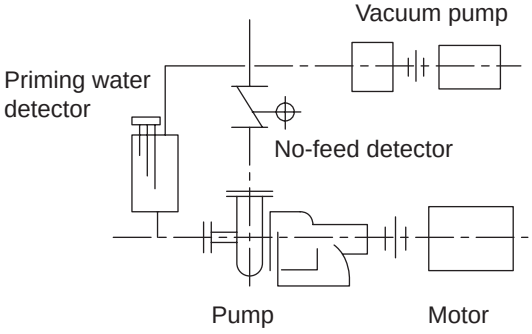

Yokota Manufacturing Co., Ltd. Tel:+81-082-241-8672 Fax:+81-082-504-1115

UHT type: High corrosion and wear resistance type for high density slurry

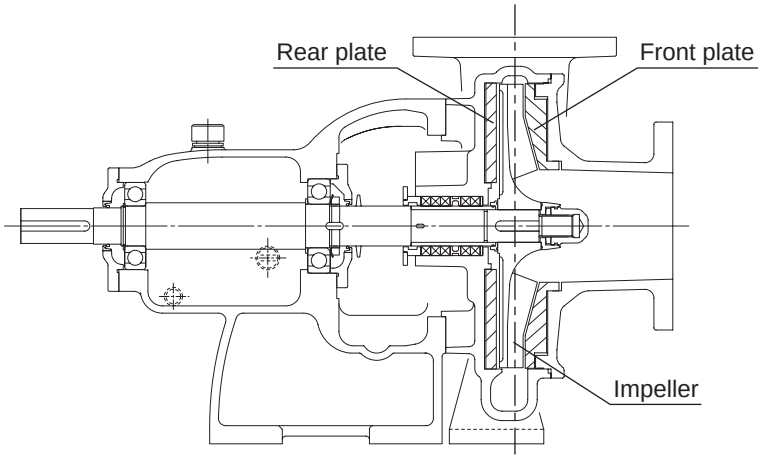

The front and rear plates (wear resistant plates) are installed to protect the casing.

Specification: Economical selections can be made from a wide variety of models similar to the UHN type.
Performance: Impeller configuration can be selected depending on use.
Material: A wide variety of materials, such as YOKOTA's corrosion and wear resistant special stainless steel casting (YST), are available.
Construction: Wear resistant plates are installed for handling high density slurry.
Shaft seal: Gland packing, mechanical seals, Non-External-Flushing Mechanical Seals can be selected depending on use.

UHPR type: Combined with submersible motor for installation in places subject to submersion

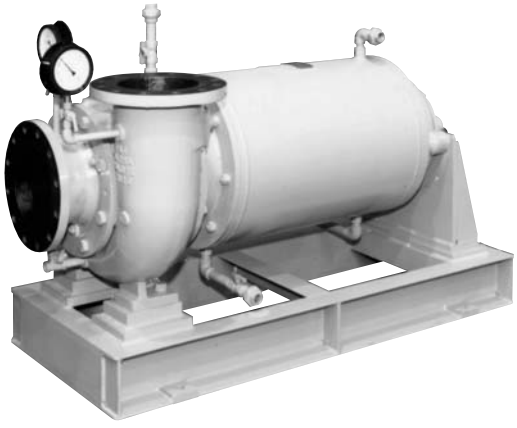

For installing pumps in such places as floodplains or basements, where there is a possibility of submersion, it is safer to use the UHPR type composed of a UHN type pump and submersible motor which is trouble-free in such situations.

For details on related dimensional outline drawings, please contact us.

Self-Priming Centrifugal Pump

Patented in Japan, U.S.A., other

Bore	40-250mm
Total head	10-90m
Capacity	0.1-8m^3/min

Technical data

Flange

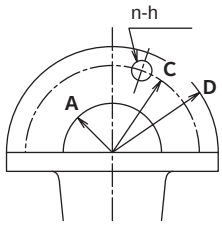

Unit : mm

Symbol	Flange dimensions (JIS 10K)								
A (Bore)	40	50	65	80	100	125	150	200	250
D	140	155	175	185	210	250	280	330	400
C	105	120	140	150	175	210	240	290	355
n - h	4-19	4-19	4-19	8-19	8-19	8-23	8-23	12-23	12-25

Foundation bolt

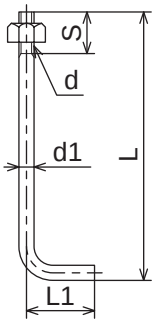

Unit : mm

Bolt d	d1	S	L1	L
M12	12	32	50	250
M16	16	40	63	315
M20	20	50	80	400
M22	22	56	90	500

Motor frame number and output power (Enclosed fan-cooling type)

Unit : kW

Pole number 2P	Pole number 4P	Pole number 6P	Frame number
0.4	0.4	–	71
0.75	0.75	0.4	80
1.5	1.5	0.75	90L
2.2			
–	2.2	1.5	100L
3.7	3.7	2.2	112M
5.5	5.5	3.7	132S
7.5			
–	7.5	5.5	132M
11	11	7.5	160M
15			
18.5	15	11	160L

Unit : kW

Pole number 2P	Pole number 4P	Pole number 6P	Frame number
22	18.5	15	180M
	22		
30	30	18.5	180L
		22	
37	37	30	200L
45	45	37	
55	55	45	225S
75	75	55	250S
90	90	75	250M
110	110	90	280S
132	132	110	280M
150	150	132	315S

Bearing, Shaft seal

Bracket number	Gland packing: Inner diameter x Outer diameter x Width	Gland packing: Q'ty	Bearing: Pump side	Bearing: Coupling side	Bearing seal: Pump side	Bearing seal: Coupling side	Lubricating oil: Oil amount L	Lubricating oil: Type
120	28 x 44 x 8	4	6306	6206	TC28408	TC28408	0.28	Turbine oil ISO VG46
130	32 x 51 x 9.5	4	6307	6207	TC32458	TC32458	0.35	
140	38 x 60 x 11	4	6308	6307	TC38558	TC35508	0.45	
145	42 x 67 x 12.5	4	6309	6308	TC42609	TC40559	0.65	
155	48 x 73 x 12.5	4	6310	6309	TC48659	TC45609	0.80	
165	55 x 80 x 12.5	5	6312	6311	TC55729	TC50689	1.20	
170	75 x 105 x 16	5	NU316	6316	TC7510013	TC7510013	1.60	

To make the best use of the features of the UHN type, please follow the items below.

Installation and piping

1. The pump sucks water in the axial direction. Be sure to install an inverse U-bent pipe in the suction piping as shown in the figure below.
2. The pump, being a self-priming type, does not require installation of an intermediate valve or a foot valve in ordinary operating conditions. However, if frequent operation or shorter self-priming time is desired, we recommend installing such valves. The purpose is to keep as much water as possible in the pump. The valve need not function perfectly and minor leakage will not affect performance.
3. If a gland packing is used for shaft sealing, we recommend installation of an external flusher to prevent air from being sucked during self-priming and to maintain efficiency of the gland packing.
4. When the pump is started up, the water inside the casing is discharged once into the discharge side before returning to the casing, and then stabilizes after recirculation begins. If the discharged water floods the check valve and the bent pipe, the amount of recirculating water becomes insufficient and self-priming efficiency decreases. Therefore, be sure to install a riser of the height shown in the figure below. For situations where the riser is too long for installation, we can provide a short discharge pipe (h2) which is made of the same material as the casing and has a special construction. Please contact us for more details.
5. Be sure to install a check valve on the discharge side of the pump. We recommend the YOKOTA Non-Water Hammer Check Valve to prevent water hammer due to reverse flow when pump operation is stopped. Particularly with parallel operation, when one pump is stopped, it will be subject to back pressure from the other pump, causing water hammer. The YOKOTA Non-Water Hammer Check Valve can prevent water hammer even in such a situation. Further, attachment of the YOKOTA No-Feed Detector (Optional) can prevent the pump from dry operation.
6. If the pumps are under parallel operation or if the actual pump head above the check valve exceeds more than 1/3 of the shut off head, back pressure acts on the check valve, making it difficult to exhaust air. Install an exhaust valve to relieve such a situation. In this case, install a suitable socket (refer to the table below) on the riser at the highest possible position (refer to " J" in the figure below), and then install the exhaust valve so that the opening end of its suction part is in the center of the riser bore.
   There may be water leakage from the exhaust valve. To prevent air from being sucked when operation is stopped, install a pipe from the exhaust valve to a point below the water level of the suction side.
   For slurry liquid pumping, please contact us.

Yokota Manufacturing Co., Ltd. Tel:+81-082-241-8672 Fax:+81-082-504-1115

Piping layout examples

Example 1.
Self-priming suction operation
Attach the inverse U-bent pipe to the pump.

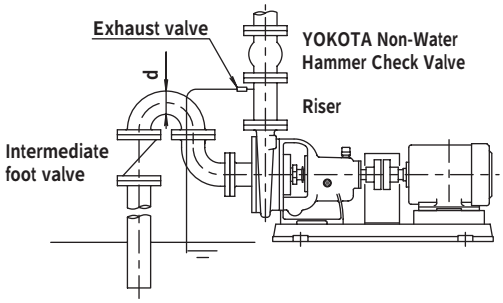

Limit the extension of the inverse U-bent pipe (L)
within 3m.

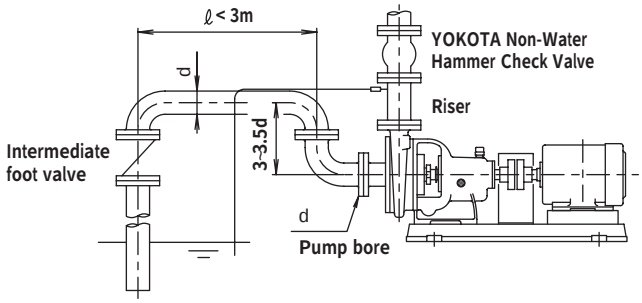

Example 2.
Sealed tank (vacuum tank) extraction operation

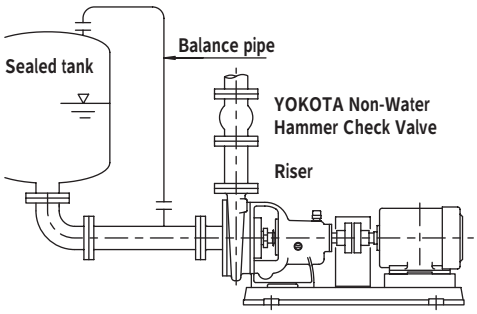

Example 3.
Self-priming suction operation with long horizontal pipe
Attach the inverse U-bent pipe.

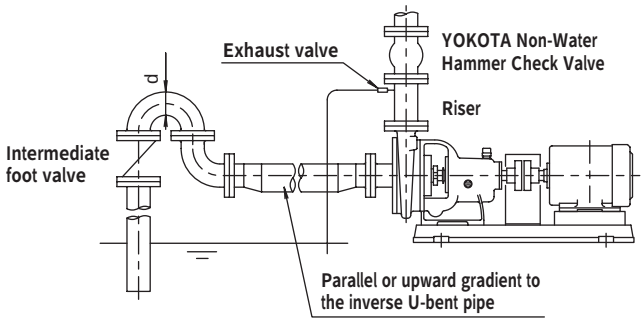

Length of riser

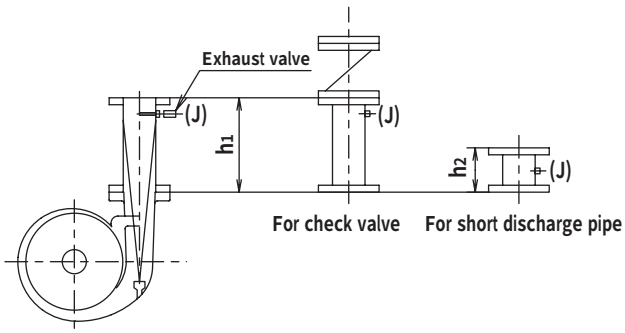

Length of riser

h_1 >= 200 + d + 5H (Total head of pump =< 50m)
h_1 >= 300 + d + 5H (Total head of pump > 50m)
Where
h_1 : Length of riser (mm)
d : Discharge bore (mm)
H : Total head of pump (m)

Example:
UHN-0520 50mm x 0.3m^3/min. x 22m x 1750rpm x 3.7kW
h_1 >= 200 + (50) + (5x22) = 360
Use a riser of over 360mm length, desirably over 500mm.
For slurry liquid pumping, please contact us.

Exhaust valve

Discharge pipe bore (mm)	Valve bore
40 - 80	10A
100 - 150	15A
200 - 250	20A

Self-Priming Centrifugal Pump

Patented in Japan, U.S.A., other

Bore	40-250mm
Total head	10-90m
Capacity	0.1-8m^3/min

Selection chart
UHN type

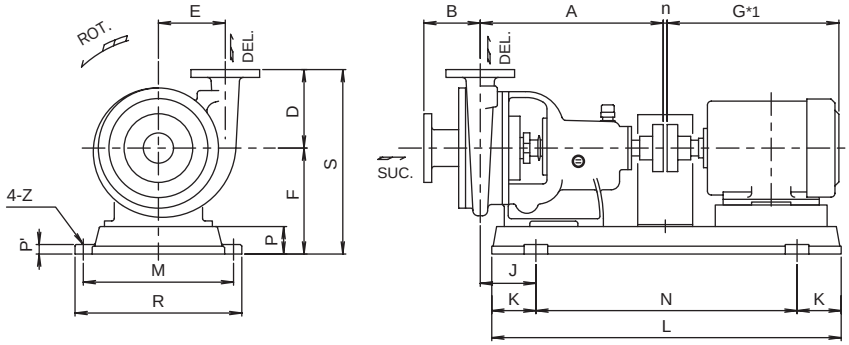

Model number explanation
XXXX-##@@xP (* *)

XXXX	: Pump type
##	: Suction/Discharge bore (cm)
@@	: Head classification
xP	: Electric motor pole number (2P, 4P, 6P, other)
(* *)	: Electric motor output power (kW) at maximum performance (using normal water at normal temperature)

Green-colored area shows that 2P motor models are also available. Please ask for details.

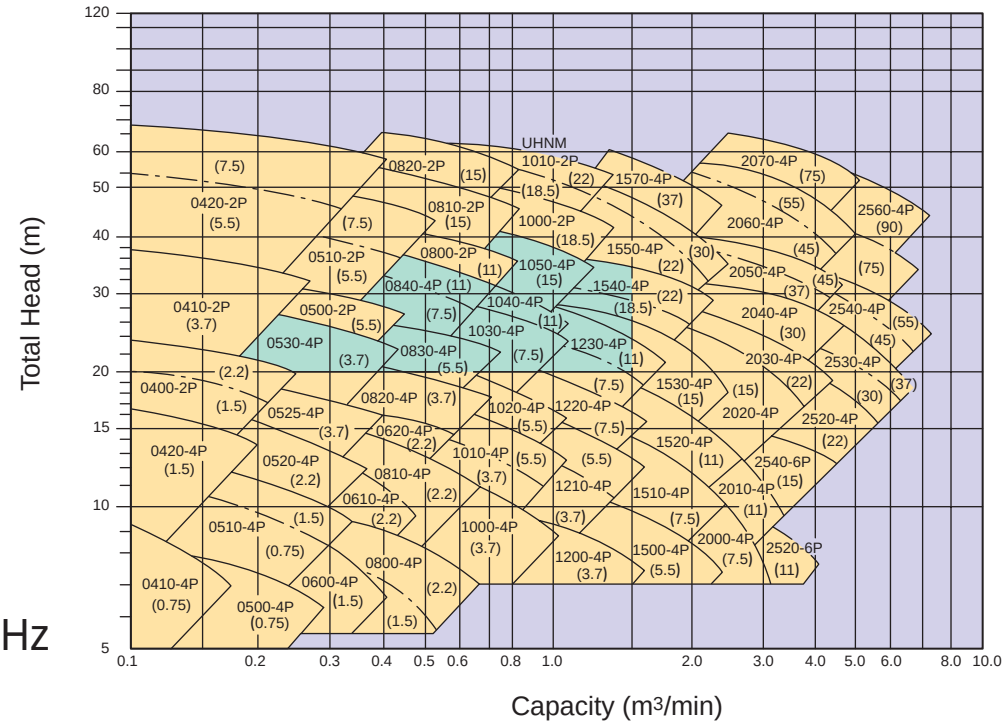

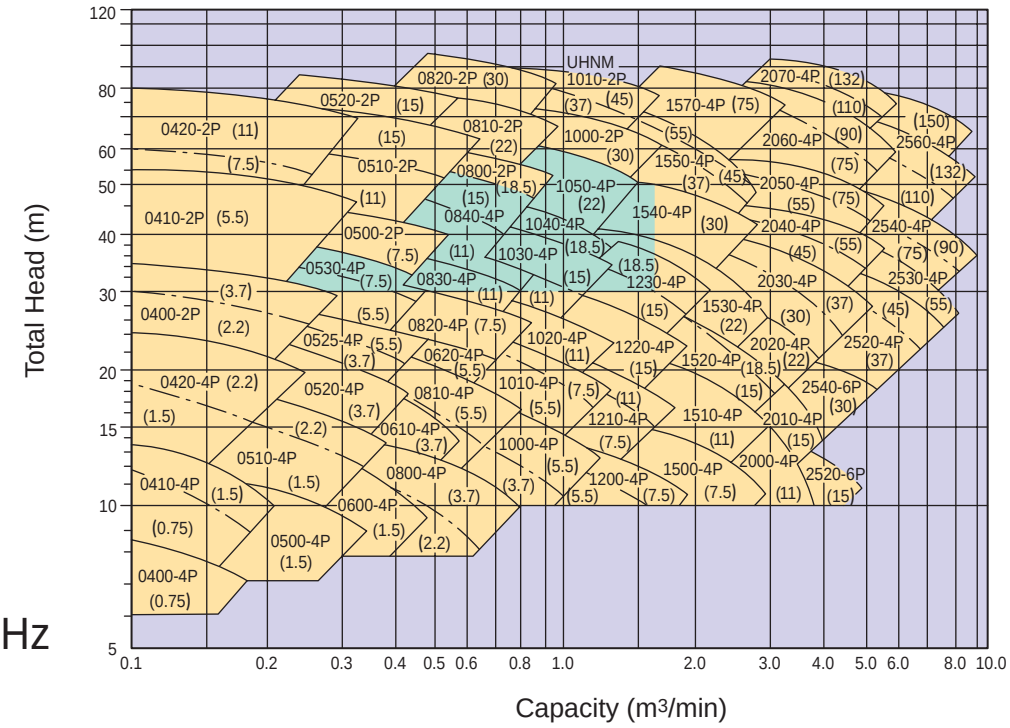

Yokota Manufacturing Co., Ltd. Tel:+81-082-241-8672 Fax:+81-082-504-1115

Outer dimensions UHN type

Unit : mm

Model No. (-Poles)	Bore Suction/ Discharge	Pump							Bracket No.	Motor				Base plate										
		A	B	D	E	F	J	Weight (kg)		Frame No.	Output power (kW)	G	Weight (kg)	Z	d	K	N	L	M	R	P	P'	n	Weight (kg)
0400-4P	40	337	110	120	110	185	122	35	120	80	0.75	262	11	15	M12	110	350	570	250	286	50	14	3	13
-2P	40	337	110	120	110	190	152	35	120	112M	3.7	376	41	15	M12	120	390	630	280	316	55	18	3	18
0410-4P	40	340	110	140	125	185	145	41	120	90L	1.5	314	20	15	M12	110	350	570	250	286	50	14	3	13
-2P	40	340	110	140	125	205	135	41	120	132S	5.5	445	55	19	M16	150	480	780	330	370	70	25	3	28
0420-4P	40	375	115	160	150	220	125	52	130	100L	2.2	348	29	15	M12	140	450	730	300	336	60	18	3	21
-2P	40	375	115	160	150	242	165	52	130	160M	11	586	100	19	M16	180	570	930	385	425	82	25	3	45
0500-4P	50	340	115	140	125	185	145	40	120	90L	1.5	314	20	15	M12	110	350	570	250	286	50	14	3	13
-2P	50	340	115	140	125	205	135	40	120	132S	7.5	445	55	19	M16	150	480	780	330	370	70	25	3	28
0510-4P	50	375	115	160	145	220	125	51	130	100L	2.2	348	29	15	M12	140	450	730	300	336	60	18	3	21
-2P	50	375	115	160	145	242	165	51	130	160M	15	586	100	19	M16	180	570	930	385	425	82	25	3	45
0520-4P	50	375	115	170	160	220	150	54	130	112M	3.7	376	41	15	M12	140	450	730	300	336	60	18	3	21
-2P	50	375	115	170	160	242	165	54	130	160M	15	586	100	19	M16	180	570	930	385	425	82	25	3	45
0525-4P	50	375	115	170	160	230	135	54	130	132S	5.5	445	55	19	M16	150	480	780	330	370	70	25	3	28
0530-4P	50	433	120	200	185	250	160	80	140	132M	7.5	483	66	19	M16	170	540	880	350	396	70	25	3	31
0600-4P	65	345	120	150	135	185	150	45	120	90L	1.5	314	20	15	M12	110	350	570	250	286	50	14	3	13
0610-4P	65	380	120	170	155	220	155	56	130	112M	3.7	376	41	15	M12	140	450	730	300	336	60	18	3	21
0620-4P	65	433	120	180	170	250	185	74	140	132S	5.5	445	55	19	M16	150	480	780	330	370	70	25	3	28
0800-4P	80	380	125	170	150	220	155	60	130	112M	3.7	376	41	15	M12	140	450	730	300	336	60	18	3	21
-2P	80	380	125	170	150	242	195	60	130	160L	18.5	630	125	19	M16	180	570	930	385	425	82	25	3	45
0810-4P	80	438	125	180	170	250	190	72	140	132S	5.5	445	55	19	M16	150	480	780	330	370	70	25	3	28
-2P	80	438	125	180	170	272	195	72	140	180M	22	656	180	19	M16	200	630	1030	430	470	92	27	3	58
0820-4P	80	495	125	200	190	275	200	101	145	132M	7.5	438	66	19	M16	170	540	880	350	396	70	25	3	31
-2P	80	495	125	200	190	295	250	101	145	180L	30	694	215	19	M16	200	630	1030	430	470	90	27	3	58
0830-4P	80	490	135	210	200	285	225	105	145	160M	11	586	100	19	M16	180	570	930	385	425	80	25	3	45
0840-4P	80	496	135	200	220	295	231	125	145	160L	15	630	125	19	M16	200	630	1030	430	470	90	27	3	58
1000-4P	100	438	135	180	170	250	190	75	140	132S	5.5	445	55	19	M16	150	480	780	330	370	70	25	3	28
-2P	100	438	135	180	170	272	220	75	140	180L	30	694	215	19	M16	200	630	1030	430	470	92	27	3	58
1010-4P	100	438	135	200	185	250	165	76	140	132M	7.5	483	66	19	M16	170	540	880	350	396	70	25	3	31
*1010-2P	100	499	135	200	185	305	254	95	145	200L	45	762	290	19	M16	220	690	1130	525	571	100	30	4	89
1020-4P	100	495	135	210	200	285	230	110	145	160M	11	586	100	19	M16	180	570	930	385	425	80	25	3	45
1030-4P	100	495	135	220	210	295	230	117	145	160L	15	630	125	19	M16	200	630	1030	430	470	90	27	3	58
1040-4P	100	495	135	230	230	295	230	130	145	180M	18.5	656	180	19	M16	200	630	1030	430	470	90	27	3	58
1050-4P	100	563	180	250	245	360	60	160	155	180M	22	656	180	19	M16	270	840	1380	525	571	110	30	3	104
1200-4P	125	510	180	190	180	275	215	110	145	132M	7.5	438	66	19	M16	170	540	880	350	396	70	25	3	31
1210-4P	125	511	170	200	190	285	246	119	145	160M	11	586	100	19	M16	180	570	930	385	425	82	25	3	45
1220-4P	125	495	155	220	200	295	230	131	145	160L	15	630	125	19	M16	200	630	1030	430	470	90	27	3	58
1230-4P	125	495	145	240	225	295	230	135	145	180M	18.5	656	180	19	M16	200	630	1030	430	470	90	27	3	58
1500-4P	150	520	205	210	200	275	225	122	145	132M	7.5	438	66	19	M16	170	540	880	350	396	70	25	3	31
1510-4P	150	505	180	210	215	285	240	130	145	160M	11	586	100	19	M16	180	570	930	385	425	82	25	3	45
1520-4P	150	505	180	210	215	295	240	135	145	160L	15	630	125	19	M16	200	630	1030	430	470	90	27	3	58
1530-4P	150	564	205	265	265	360	61	220	155	180M	22	656	180	19	M16	270	840	1380	525	571	110	30	3	104
1540-4P	150	564	205	265	265	360	91	220	155	180L	30	630	215	19	M16	270	840	1380	525	571	110	30	4	104
1550-4P	150	680	200	260	275	410	210	252	165	200L	45	762	290	19	M16	270	840	1380	525	571	110	30	4	104
1570-4P	150	680	200	290	300	445	175	270	165	250S	75	842	470	23	M20	250	1100	1600	550	600	145	25	4	200
2000-4P	200	573	217	270	250	360	50	255	155	160M	11	586	100	19	M16	270	840	1380	525	571	110	30	3	104
2010-4P	200	573	217	270	250	360	70	230	155	160L	15	630	125	19	M16	270	840	1380	525	571	110	30	3	104
2020-4P	200	695	210	280	275	410	175	275	165	180M	22	656	180	19	M16	270	840	1380	525	571	110	30	3	104
2030-4P	200	696	225	285	295	410	225	280	165	200L	37	762	290	19	M16	270	840	1380	525	571	110	30	4	104
2040-4P	200	696	225	285	295	410	175	285	165	225S	55	807	335	23	M20	300	930	1530	525	571	110	30	4	110
2050-4P	200	806	215	300	305	500	157	380	170	250S	75	842	470	23	M20	250	1200	1700	550	600	145	25	4	240
2060-4P	200	801	235	325	330	500	152	430	170	250M	90	923	520	23	M20	250	1200	1700	550	600	145	25	4	240
2070-4P	200	806	253	350	355	525	207	450	170	280M	132	1071	800	25	M22	300	1200	1800	590	650	170	28	4	280
2520-4P	250	695	270	300	275	410	225	320	165	200L	37	762	290	19	M16	270	840	1380	525	571	110	30	4	104
2530-4P	250	819	250	380	300	500	170	380	170	225S	50	822	335	23	M20	250	1100	1600	550	600	145	25	4	200
2540-4P	250	819	250	380	300	500	170	400	170	250M	90	923	520	23	M20	250	1200	1700	550	600	145	25	4	240
2560-4P	250	819	280	380	345	525	220	460	170	315S	150	1230	1200	25	M22	300	1300	1900	640	700	170	28	4	330

Note:

- Standard accessories: Common base plate, Shaft coupling, Foundation bolts and Safety cover.
- Base plate with dimension L larger than 1600mm is made of steel plate.
- (*) For the 2P, pump type is UHNM-1010, and the bracket No. is 145.
- Outer dimensions refer only to electric motors at maximum motor output (at 60Hz), therefore there may be differences in outer dimensions. For details on related dimensional outline drawings, please contact us.

Self-Priming Centrifugal Pump

Patented in Japan, U.S.A., other

Bore	40-250mm
Total head	10-90m
Capacity	0.1-8m³/min

Selection chart
UHNS type

Model number explanation
XXXX-##@@-xP (* *)
XXXX : Pump type
: Suction/Discharge bore (cm)
@@ : Head classification
xP : Electric motor pole number (2P, 4P, 6P, other)
(* *) : Electric motor output power (kW) at maximum performance (using normal water at normal temperature)

Please contact us for details concerning specifications not indicated in this chart.
Motor output power in this chart includes power for simultaneous operation of the Vacuum Pump VP-S12.

50Hz

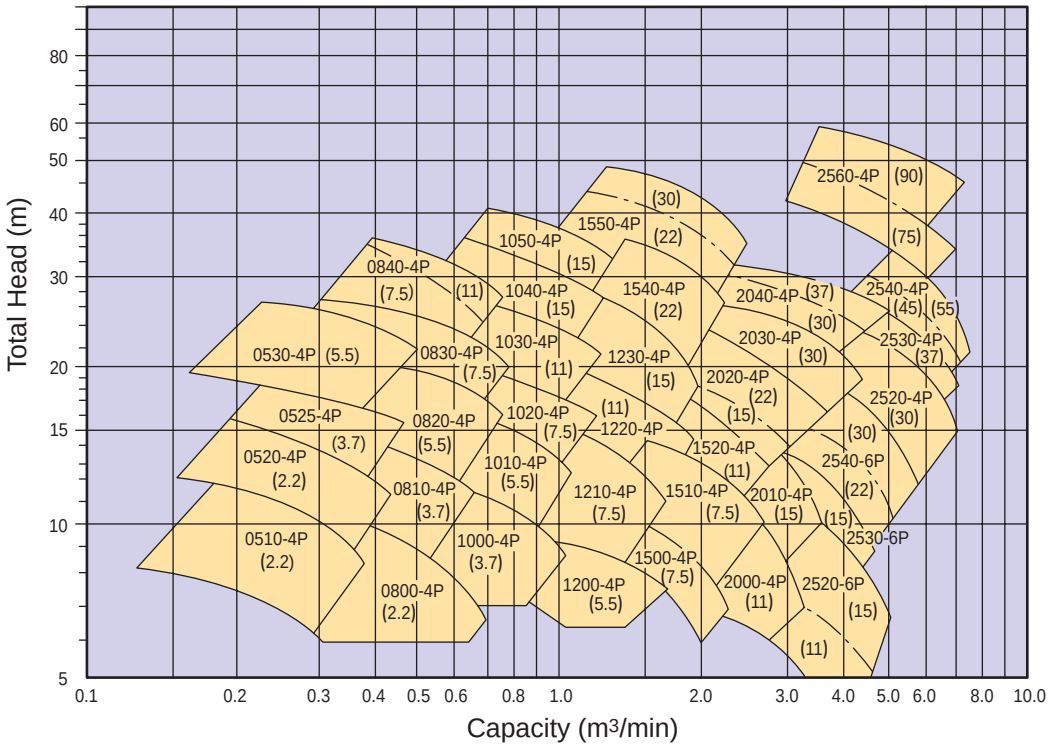

60Hz

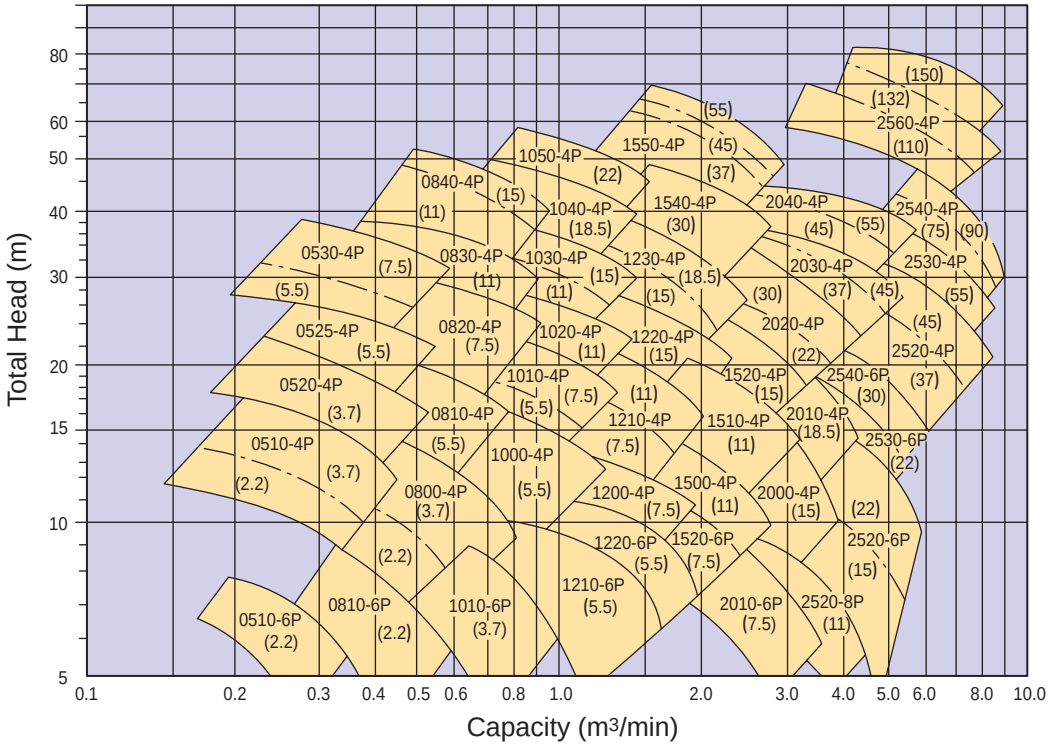

Yokota Manufacturing Co., Ltd. Tel:+81-082-241-8672 Fax:+81-082-504-1115

Outer dimensions
UHNS type

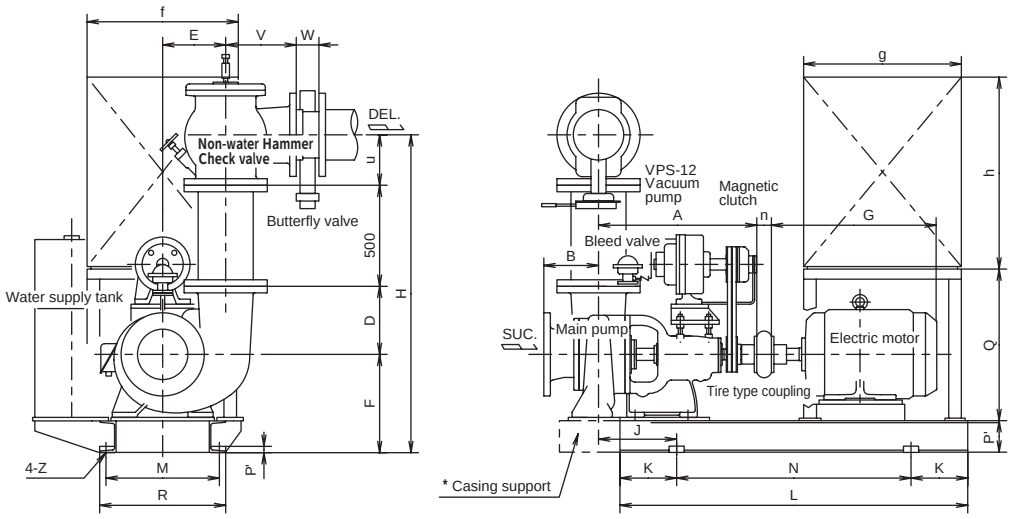

Unit : mm

Model No.	Motor						Pump						J	H	n	Base Plate							
	50Hz			60Hz																			
	(kW)	Pole No.	G	(kW)	Pole No.	G	Bore	A	B	D	E	F				Z/M	K	N	L	M	R	P'	P''
UHNS-0510	2.2	4	378	2.2	4	378	50	455	140	160	145	275	175	1035	39	19/M16	125	850	1100	310	350	19	100
0800	2.2	4	378	3.7	4	398	80	460	145	170	150	275	180	1065	39	19/M16	125	850	1100	310	350	19	100
0810	3.7	4	398	2.2	6	398	80	518	155	180	170	295	210	1095	45	19/M16	150	900	1200	310	350	19	100
1000	3.7	4	398	5.5	4	454	100	520	160	180	170	295	210	1095	51	19/M16	150	900	1200	310	350	19	100
1010	5.5	4	454	3.7	6	454	100	520	175	200	185	295	210	1115	51	19/M16	150	900	1200	310	350	19	100
1200	5.5	4	454	7.5	4	493	125	580	180	190	180	320	225	1160	51	19/M16	150	900	1200	310	350	19	100
1210	7.5	4	493	5.5	6	493	125	581	180	200	190	320	226	1170	51	19/M16	150	900	1200	310	350	19	100
1220	-	-	-	5.5	6	493	125	565	190	220	200	320	210	1190	51	19/M16	150	900	1200	310	350	19	100
1500	-	-	-	11	4	608	150	590	205	210	200	320	235	1190	51	19/M16	150	900	1200	410	450	19	100
1520	11	4	608	7.5	6	608	150	575	210	210	215	320	220	1190	51	19/M16	150	900	1200	410	450	19	100
* 2000	7.5	4	493	11	4	608	200	635	217	270	250	390	85	1365	51	23/M20	200	1100	1400	400	450	25	125
* 2010	11	4	608	7.5	6	608	200	628	217	270	250	390	85	1360	51	23/M20	200	1100	1400	400	450	25	125
* 2520	22	4	661	11	8	661	250	750	270	300	275	445	195	1480	58	23/M20	250	1100	1600	400	450	25	125
* 2520	-	-	-	15	6	705	250	750	270	300	275	445	195	1480	67	23/M20	250	1100	1600	400	450	25	125
* 2540	15	6	661	-	-	-	250	879	250	380	300	500	170	1615	58	23/M20	250	1200	1700	550	600	25	125
* 2560	-	-	-	110	4	1032	250	879	280	380	345	565	100	1680	139	23/M20	200	950	2300	590	650	25	180

Note
- (*) shows casing-support type.